DE series
PCB mount ultra-compact, regulated, high voltage DC-DC converters

- **56 standard products**
- **Vin: 15Vdc or 24Vdc**
- **Vout: 0 to 1kV, 2kV, 4kV or 6kV**
- **Pout: 1W, 2W, 4W or 6W**

(The DA & DE series are complementary)



Mains applications:		
Avalanche Photo Diodes (APD)	Electrostatic Chuck (E-chuck)	Gas Chromatography
Geiger-Müller Tubes (GM Tubes)	Particle physics detectors	Scanning electron microscopes
Laser range finder detectors	Photomultiplier Tubes (PMT)	PZT Drivers

Features :		
Small and lightweight	Tight line / load regulation	Low ripple (0.005% Vpk-to-pk)
PCB flat mounting	Voltage & current monitors	Low noise due to metal shielding
Adjustable output from 0 to 100%	Arc and short circuit protected	Thermal protection

Specifications (at Tamb=25°C unless otherwise specified):	
Input voltage Vin, (pins 2 & 3)	15Vdc ±1.5Vdc or 24Vdc ±2Vdc, according to model
HV output Vout, (pin 8)	0 to 1000V through 0 to 6000V according to model
Polarity	Fixed positive [DExxP] or negative [DExxN]; refer to the Selection Guide
HV setting, (pins 4 & 6)	Option C5: via external voltage source 0/ 5V ±0.1 % at full scale, impedance input = 1MΩ Option C10: via external voltage source 0/ 10V ±0.1 % at full scale, impedance input =166KΩ
Max. output current Iout	Limited to 110 % of nominal current; refer to the Selection Guide
Load voltage regulation	±0,01 % of full output voltage for no load to full load
Line voltage regulation	±0,01 % of full output voltage over specified input voltage range
Ripple	0,005 % peak-to-peak at full load
Temperature coefficient	100ppm/°C
Output HV monitoring (pin 7) (still operating in inhibition mode)	• Option C5: analog 0/+ 5V buffered output signal, accuracy ±0.2 % • Option C10: analog 0/+10V buffered output signal, accuracy ±0.2 % Output impedance = 1kΩ Temperature coefficient: 100ppm/°C
Output current monitoring (pin 5) (still operating in inhibition mode)	Option C5: analog 0/+ 5V buffered output signal, accuracy ±2 % Option C10: analog 0/+10V buffered output signal, accuracy ±2 % Output impedance = 1kΩ Temperature coefficient: 100ppm/°C
HV power ON/OFF (pin 1)	To enable HV output, connect pin 1 to ground. Open collector and TLL level signal compatible. Unconnected pin1 disables HV output.
Operating temperature	Refer to Derating Curve below
Storage temperature	-10°C to +70°C

SDS HIGH VOLTAGE
18 avenue Raspail
94100 SAINT MAUR DES FOSSES - France
+33(0)1 48 76 88 45
contact@sdshv.com
www.sdshv.com

©SDS HIGH VOLTAGE 2026

Safeguards	• Protected against reverse Vin • Soft start feature : the start is guaranteed with no overshoot • Auto inhibition if Tcase > 75°C (automatic restart after cooling) • HV setting internally limited to 10.6V for the C10 models and to 5.3V for the C5 models

Derating curve:

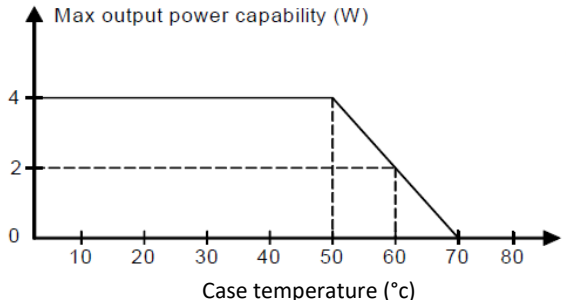

The installation of a heatsink might be necessary in a confined environment.

Mechanical dimensions & pinout:

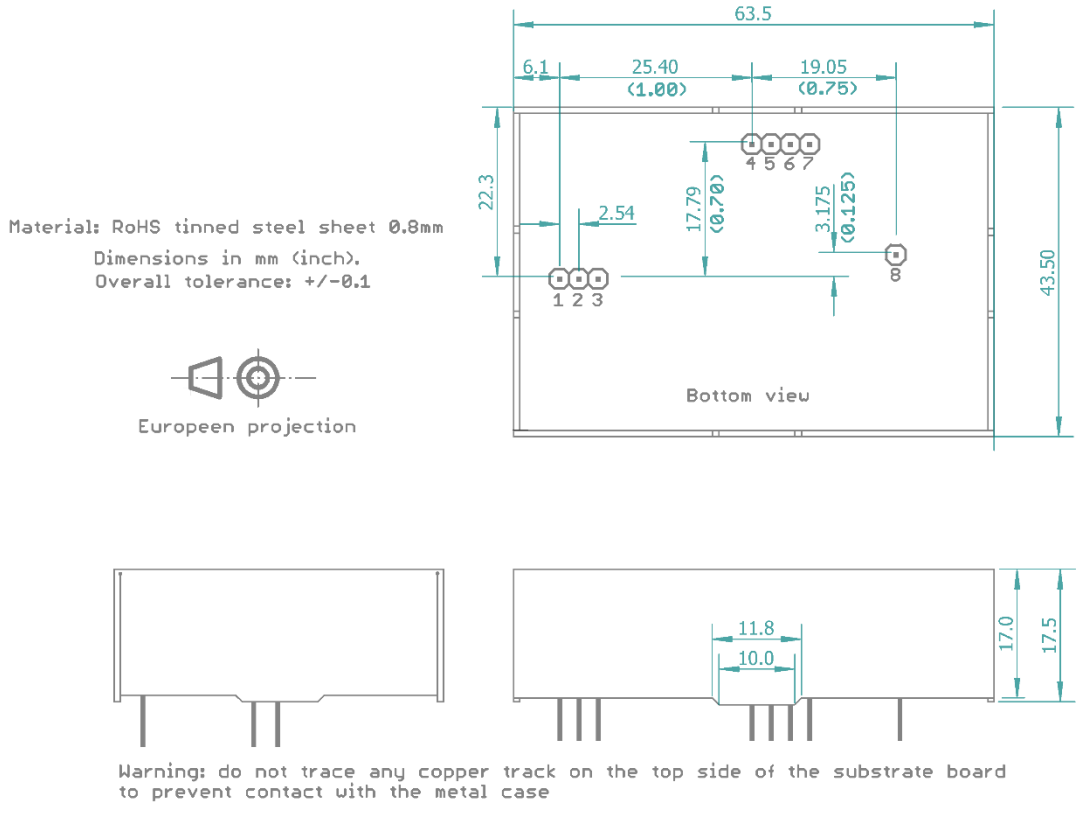

©SDS HIGH VOLTAGE 2026

DE series
PCB mount ultra-compact, regulated, high voltage DC-DC converters

Package configuration:	
Case material	Tin steel plate
Case dimensions LxWxH	63.5 x 44.0 x17.5 mm
Pins	Square 0.63 x 0.63 mm
Weight	72g
Insulation	Fully potted in an UL registered epoxy resin
Pins function:	
HV inhibition (logic input)	1: input inhibit
Input supply	2: supply 0V 3: supply V+
Signal ground	4: 0V signal
HV current monitor (analog output)	5: current monitor
HV setting (analog input)	6: control input
HV voltage monitor (analog output)	7: voltage monitor
HV output	8: HV
Note : Pin 2, pin 4 and the case are internally connected. HV return path must be connected to pin 2.	

Pins function:

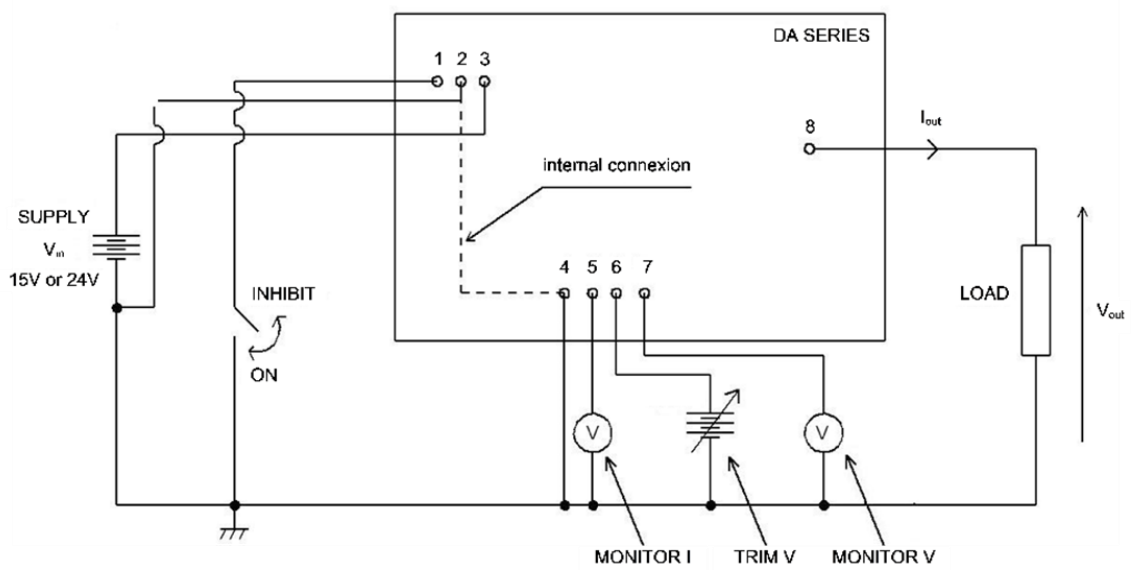

SDS HIGH VOLTAGE
18 avenue Raspail
94100 SAINT MAUR DES FOSSES - France
+33(0)1 48 76 88 45
contact@sdshv.com
www.sdshv.com

©SDS HIGH VOLTAGE 2026

Ordering selection guide:

Vout	Iout/pout	Vin	Polarity	Ctrl/ Monitor	Old references	Ordering references	#
1kV	6.0mA / 6W	15V	-	0/5V	DE15N102602-5	DE15N1-6-C5	#1
				0/10V	DE15N102602-10	DE15N1-6-C10	#2
			+	0/5V	DE15P102602-5	DE15P1-6-C5	#3
				0/10V	DE15P102602-10	DE15P1-6-C10	#4
		24V	-	0/5V	DE24N102602-5	DE24N1-6-C5	#5
				0/10V	DE24N102602-10	DE24N1-6-C10	#6
			+	0/5V	DE24P102602-5	DE24P1-6-C5	#7
				0/10V	DE24P102602-10	DE24P1-6-C10	#8
2kV	3.0mA / 6W	15V	-	0/5V	DE15N202302-5	DE15N2-6-C5	#9
				0/10V	DE15N202302-10	DE15N2-6-C10	#10
			+	0/5V	DE15P202302-5	DE15P2-6-C5	#11
				0/10V	DE15P202302-10	DE15P2-6-C10	#12
		24V	-	0/5V	DE24P202302-5	DE24P2-6-C5	#13
				0/10V	DE24P202302-10	DE24P2-6-C10	#14
			+	0/5V	DE24N202302-5	DE24N2-6-C5	#15
				0/10V	DE24N202302-10	DE24N2-6-C10	#16
4kV	1.5mA / 6W	15V	-	0/5V	DE15N402152-5	DE15N4-6-C5	#17
				0/10V	DE15N402152-10	DE15N4-6-C10	#18
			+	0/5V	DE15P402152-5	DE15P4-6-C5	#19
				0/10V	DE15P402152-10	DE15P4-6-C10	#20
		24V	-	0/5V	DE24N402152-5	DE24N4-6-C5	#21
				0/10V	DE24N402152-10	DE24N4-6-C10	#22
			+	0/5V	DE24P402152-5	DE24P4-6-C5	#23
				0/10V	DE24P402152-10	DE24P4-6-C10	#24
6kV	160µA / 1W	15V	-	0/5V	DE15N602161-5	DE15N6-1-C5	#25
				0/10V	DE15N602161-10	DE15N6-1-C10	#26
			+	0/5V	DE15P602161-5	DE15P6-1-C5	#27
				0/10V	DE15P602161-10	DE15P6-1-C10	#28
		24V	-	0/5V	DE24N602161-5	DE24N6-1-C5	#29
				0/10V	DE24N602161-10	DE24N6-1-C10	#30
			+	0/5V	DE24P602161-5	DE24P6-1-C5	#31
				0/10V	DE24P602161-10	DE24P6-1-C10	#32
	333µA / 2W	15V	-	0/5V	DE15N602331-5	DE15N6-2-C5	#33
				0/10V	DE15N602331-10	DE15N6-2-C10	#34
			+	0/5V	DE15P602331-5	DE15P6-2-C5	#35

SDS HIGH VOLTAGE
18 avenue Raspail
94100 SAINT MAUR DES FOSSES - France
+33(0)1 48 76 88 45
contact@sdshv.com
www.sdshv.com

©SDS HIGH VOLTAGE 2026

				0/10V	DE15P602331-10	DE15P6-2-C10	#36
		24V	-	0/5V	DE24N602331-5	DE24N6-2-C5	#37
				0/10V	DE24N602331-10	DE24N6-2-C10	#38
			+	0/5V	DE24P602331-5	DE24P6-2-C5	#39
				0/10V	DE24P602331-10	DE24P6-2-C10	#40
	666µA / 4W	15V	-	0/5V	DE15N602661-5	DE15N6-4-C5	#41
				0/10V	DE15N602661-10	DE15N6-4-C10	#42
			+	0/5V	DE15P602661-5	DE15P6-4-C5	#43
				0/10V	DE15P602661-10	DE15P6-4-C10	#44
		24V	-	0/5V	DE24N602661-5	DE24N6-4-C5	#45
				0/10V	DE24N602661-10	DE24N6-4-C510	#46
			+	0/5V	DE24P602661-5	DE24P6-4-C5	#47
				0/10V	DE24P602661-10	DE24P6-4-C10	#48
	1 mA / 6W	15V	-	0/5V	DE15N602102-5	DE15N6-6-C5	#49
				0/10V	DE15N602102-10	DE15N6-6-C10	#50
			+	0/5V	DE15P602102-5	DE15P6-6-C5	#51
				0/10V	DE15P602102-10	DE15P6-6-C10	#52
		24V	-	0/5V	DE24N602102-5	DE24N6-6-C5	#53
				0/10V	DE24N602102-10	DE24N6-6-C10	#54
			+	0/5V	DE24P602102-5	DE24P6-6-C5	#55
				0/5V	DE24P602102-10	DE24P6-6-C10	#56

©SDS HIGH VOLTAGE 2026